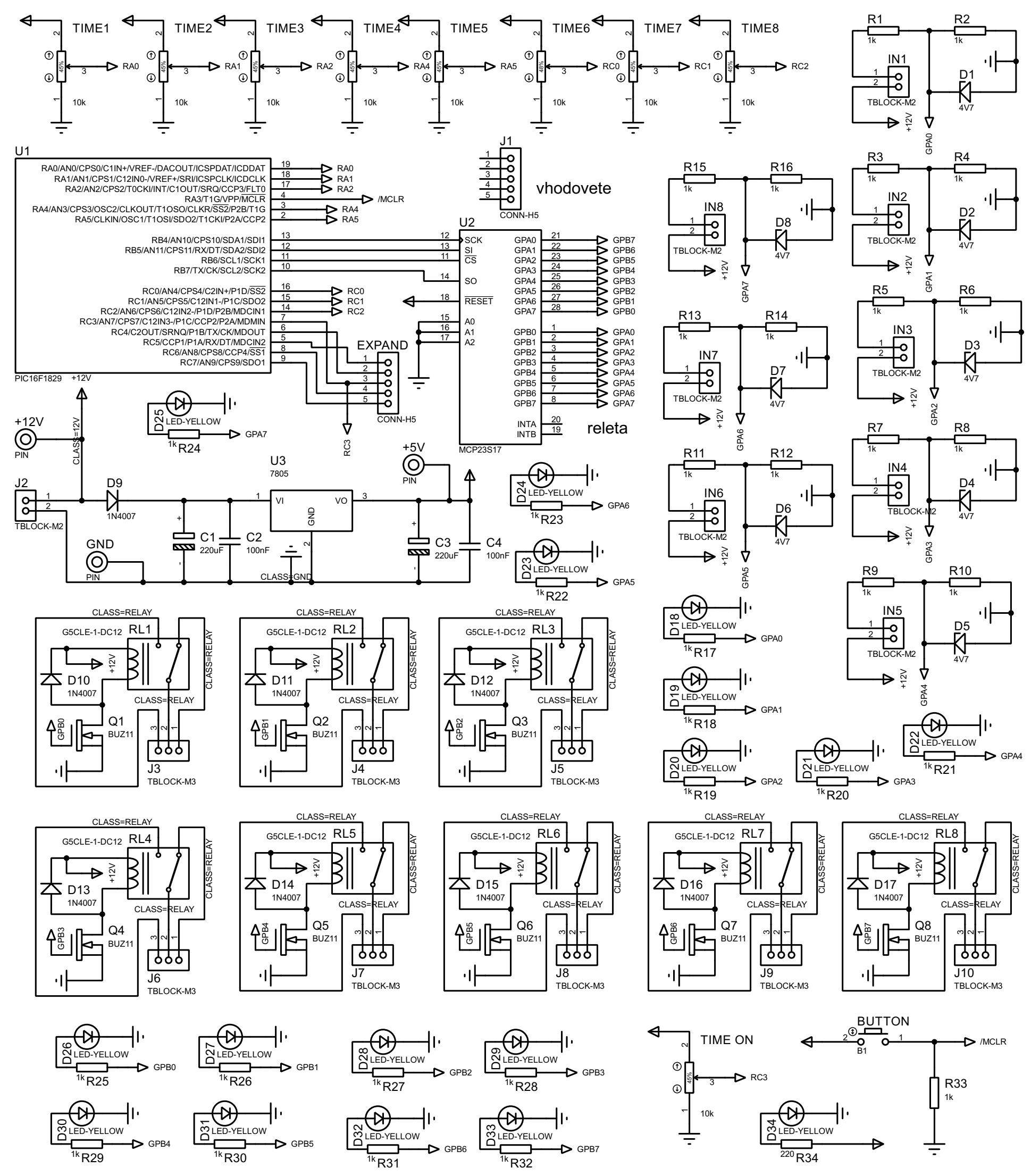
TIME1
TIME2
TIME3
TIME4
TIME5
TIME6
TIME7
TIME8
RA0
RA1
RA2
RA4
RA5
RC0
RC1
RC2
10k
R1
R2
IN1
D1
TBLOCK-M2
4V7
+12V
GPA0
R3
R4
IN2
D2
GPA1
R5
R6
IN3
D3
GPA2
R7
R8
IN4
D4
GPA3
R9
R10
IN5
D5
GPA4
R15
R16
IN8
D8
GPA7
R13
R14
IN7
D7
GPA6
R11
R12
IN6
D6
GPA5
U1
PIC16F1829
RA0/AN0/CPS0/C1IN+/VREF-/DACOUT/ICSPDAT/ICDDAT
RA1/AN1/CPS1/C12IN0-/VREF+/SRI/ICSPCLK/ICDCLK
RA2/AN2/CPS2/T0CKI/INT/C1OUT/SRQ/CCP3/FLT0
RA3/T1G/VPP/MCLR
RA4/AN3/CPS3/OSC2/CLKOUT/T1OSO/CLKR/SS2/P2B/T1G
RA5/CLKIN/OSC1/T1OSI/SDO2/T1CKI/P2A/CCP2
RB4/AN10/CPS10/SDA1/SDI1
RB5/AN11/CPS11/RX/DT/SDA2/SDI2
RB6/SCL1/SCK1
RB7/TX/CK/SCL2/SCK2
RC0/AN4/CPS4/C2IN+/P1D/SS2
RC1/AN5/CPS5/C12IN1-/P1C/SDO2
RC2/AN6/CPS6/C12IN2-/P1D/P2B/MDCIN1
RC3/AN7/CPS7/C12IN3-/P1C/CCP2/P2A/MDMIN
RC4/C2OUT/SRNQ/P1B/TX/CK/MDOUT
RC5/CCP1/P1A/RX/DT/MDCIN2
RC6/AN8/CPS8/CCP4/SS1
RC7/AN9/CPS9/SDO1
/MCLR
J1
CONN-H5
vhodovete
U2
MCP23S17
SCK
SI
CS
SO
RESET
A0
A1
A2
INTA
INTB
GPA0
GPA1
GPA2
GPA3
GPA4
GPA5
GPA6
GPA7
GPB0
GPB1
GPB2
GPB3
GPB4
GPB5
GPB6
GPB7
EXPAND
CONN-H5
RC3
releta
+12V
PIN
CLASS=+12V
D25
LED-YELLOW
R24
J2
TBLOCK-M2
D9
1N4007
GND
C1
220uF
C2
100nF
U3
7805
VI
VO
GND
CLASS=GND
+5V
C3
220uF
C4
100nF
D24
R23
D23
R22
CLASS=RELAY
G5CLE-1-DC12
RL1
RL2
RL3
RL4
RL5
RL6
RL7
RL8
D10
D11
D12
D13
D14
D15
D16
D17
1N4007
Q1
Q2
Q3
Q4
Q5
Q6
Q7
Q8
BUZ11
GPB0
GPB1
GPB2
GPB3
GPB4
GPB5
GPB6
GPB7
J3
J4
J5
J6
J7
J8
J9
J10
TBLOCK-M3
D18
D19
D20
D21
D22
R17
R18
R19
R20
R21
D26
D27
D28
D29
D30
D31
D32
D33
R25
R26
R27
R28
R29
R30
R31
R32
TIME ON
RC3
10k
BUTTON
B1
/MCLR
R33
D34
R34
220